Freestyle V2 Kit

HDZero – 5.8 GHz digital video transmitter with Nano 90 V2 camera
User Manual



Never power the video transmitter without an antenna installed and secured.

www.rotorama.com

Contents

1. Safety Instructions

2. Product Description

2.1 What is HDZero?

2.2 Freestyle V2 Kit

2.3 Package Contents

2.4 Specifications – Video Transmitter

2.5 Specifications – Nano 90 V2 Camera

2.6 VTX Parts

3. Installation

3.1 VTX Installation Diagram

3.2 Powering the VTX: BEC

3.3 Mounting Considerations

3.4 Antenna and U.FL Connector

4. Configuration

4.1 OSD/MSP Setup (Betaflight)

4.2 VTX Tables and SmartAudio

4.3 Stick Command Gestures

4.4 Using the VTX Menu

4.5 Typical Settings

5. VTX LED Pattern

6. VTX Firmware Update

7. Troubleshooting

8. Information for the EU and Czech Market

9. Warranty and rights arising from defective performance

1. Safety Instructions

1.1 Before You Start

Read the entire manual before installation. This kit is intended for experienced hobbyists who can solder and configure a multirotor flight controller (FC). Incorrect wiring can permanently damage the video transmitter (VTX), the camera and the flight controller.

- **Never apply power to the VTX without an antenna installed and secured.** The RF amplifier may be damaged.
- The VTX becomes hot during operation – even in P1MW mode. Do not touch or cover the case and do not leave it powered for a long time without airflow.
- Observe the input voltage range of 7–25 V and the power polarity. Check the wiring before connecting a battery for the first time.
- The U.FL antenna connector is mechanically fragile. Treat it as if it is made of glass (see chapter 3.4).
- This product is not a toy. It contains small parts – keep it out of the reach of children.
- A battery is not included. Follow the battery manufacturer's instructions when handling Li-Po batteries.

1.2 Radio Transmission and RF Power

The VTX transmits in the 5.8 GHz band. From the factory it offers 25 mW and 200 mW. After unlocking with a special firmware it is capable of up to 900 mW RF output (on channel R1 – output decreases as frequency increases).

※ The law of the country in which you operate the VTX applies. In the Czech Republic, the CTU general authorisation No. VO-R/10 permits a maximum of 25 mW e.i.r.p. in the 5725–5875 MHz band. Higher power levels, the power unlock and the low band may only be used with the required authorisation (e.g. a HAM radio licence) or where local regulations explicitly allow it. The user is responsible for the channel and power setting.

2. Product Description

2.1 What is HDZero?

HDZero offers industry-leading low latency, giving you more time to react. With its smooth, consistent FPV video feed, you get the same locked-in feeling as with analog video – but with the clarity of HD. HDZero supports the standard 5.8 GHz video channels, meaning you can have up to 8 simultaneous pilots flying either full-quality HDZero or analog video. You can tune in to any channel and view the pilot's feed with no loss of quality.

HDZero is rapidly evolving. Please always use the latest firmware that is located at www.hd-zero.com/document.

2.2 Freestyle V2 Kit

The kit contains the **HDZero Freestyle V2 VTX** – the 2nd generation 5.8 GHz digital video transmitter which can be installed into most 3-5-inch HD drones – and the **HDZero Nano 90 V2** camera. All sockets of the VTX are well protected by the CNC case that provides durability, RF shielding and improved signal integrity. A wire harness is included for solderless connection for power and MSP UART port. The antenna and MIPI cable are secured by the included retention bar and screws.

2.3 Package Contents

1×	HDZero Freestyle V2 VTX
1×	HDZero Nano 90 V2 camera (with 19 × 19 mount)
1×	HDZero RHCP antenna
1×	120 mm MIPI cable
1×	Power cable (Power/UART)
1×	SA cable
1×	Plastic bar for MIPI cable with 3 screws M1.4 × 2 mm
1×	Plastic bar for U.FL with 3 screws M1.4 × 8 mm
1×	Double-sided tape (29 × 30 × 1 mm)

The flight controller (FC), battery, HDZero goggles or video receiver and the HDZero VTX Programmer are **not** included.

2.4 Specifications – Video Transmitter

Parameter	Value
Model	HDZero Freestyle V2 VTX (HDZ3131)
Manufacturer	Divimath, Inc.
Dimensions	29 × 30 × 14 mm

Parameter	Value
Weight	22.3 g
Mounting pattern	20 × 20 mm, M2 holes
Input power	7–25 V
Power consumption	6–15 W
Operating frequency	5725–5850 MHz
RF power output	25 mW, 200 mW (after unlock 500 mW / MAX, up to 900 mW on channel R1)
Channels	R1–R8, E1, F1, F2, F4; L1–L8 after low band unlock
Video modes	720p60, 1080p30, 540p60, 540p90
Antenna interface	Secured U.FL
Video in	Secured MIPI
Antenna included	Yes, polarized (RHCP)
MSP OSD / MSP Canvas Mode	Yes
SmartAudio	Not supported (use MSP)
Operating temperature	0–40 °C

※ The video modes available also depend on the camera – the Nano 90 V2 camera supports the modes listed in chapter 2.5.

2.5 Specifications – Nano 90 V2 Camera

Parameter	Value
Model	HDZero Nano 90 V2
Resolution and frame rate	720 × 540p90 (90 FPS, requires HDZero Goggle) 720 × 540p60 (60 FPS, better penetration/range) 960 × 720p60 (60 FPS)
Aspect ratio	4:3
Image sensor	1/3"
Shutter	Rolling shutter
Lens	RC18D
Field of view (FOV)	D 162°, H 132°, V 101°
Dimensions	18 × 14 × 18 mm (L × W × H)
Net weight	5.2 g (without cable)
Latency (with HDZero Goggle)	3 ms pixel, 14 ms frame



HDZero Nano 90 V2 camera

2.6 VTX Parts

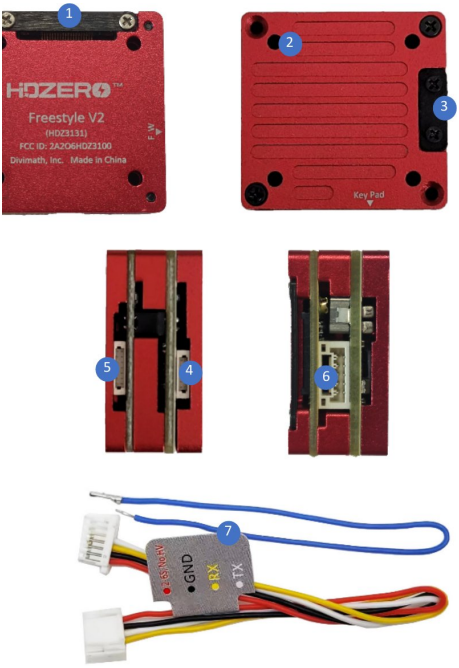

Freestyle V2 VTX – top, bottom, side views and wire harness

①	Secured MIPI connector
②	M2 mounting hole
③	Secured U.FL connector
④	Keypad connector
⑤	FW update connector
⑥	Power (7–25 V) / UART connector
⑦	Power/UART harness

▶ Power/UART connector pinout

Pin	Cable color	Connected with
Ground	black	Ground
Power	red	Power
RX	yellow	FC.TX
TX	white	FC.RX
SA	blue	not used

3. Installation

3.1 VTX Installation Diagram

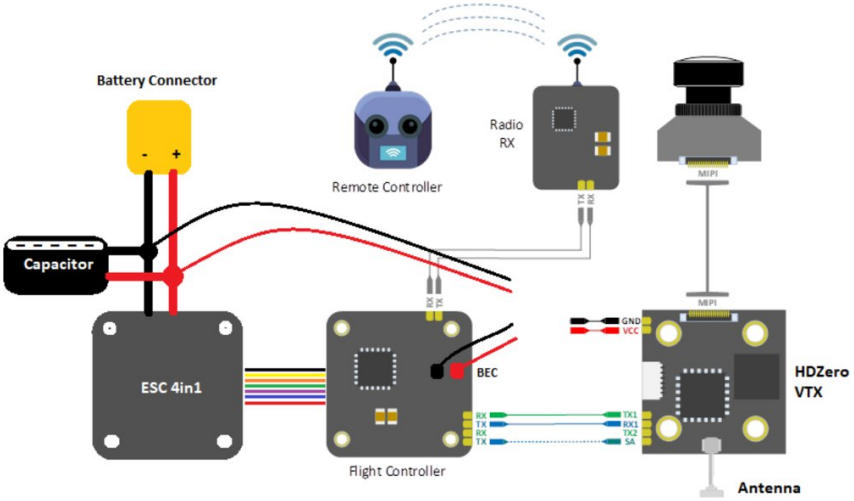

Typical connection of an HDZero VTX with a flight controller, ESC, radio receiver and camera

- Use a **BEC** to power the HDZero VTX whenever feasible. Before connecting, verify the VTX's specific voltage and current requirements, as well as the BEC output capability of your flight controller.
- Whenever feasible, opt for the HDZero Halo FC – it enables a solder-free connection to the Freestyle V2 VTX, simplifying assembly and minimizing setup errors.
- Don't use SmartAudio (deprecated). Use MSP instead.
- One UART is needed for OSD, camera, VTX menu and MSP VTX.
- **Never apply power on the VTX without the antenna installed and secured.**
- The VTX itself has no inherent preference for antenna polarization. However, for optimal signal performance, its antenna polarization should be matched with that of the receiving device – such as the HDZero Goggle, HDZero receiver or HDZero monitor.

3.2 Powering the VTX: BEC

Using a battery eliminator circuit (**BEC**) is highly recommended. Although you can power the VTX directly from the battery (VBAT), a BEC will provide more consistent power and will help absorb any voltage spikes, protecting your VTX from over-voltage conditions and under-voltage (brown-outs).

Select a BEC that provides voltage within the range the VTX accepts and that is capable of supplying enough current. Whether the BEC is built into your flight controller or standalone, check its voltage and current ratings. All FCs that include an integrated BEC for DJI VTXes should also work for HDZero VTXes.

- Check your FC specs to see if you can run your VTX from the FC's BEC.
- If not, run the VTX from a suitable standalone BEC.
- Running on VBAT is always the last choice due to the challenging voltage environment in an aircraft.
- The Freestyle V2 VTX consumes up to 15 W. If it is connected to an FC with a built-in BEC output, make sure the BEC can provide enough current – for example, if the BEC provides 10 V, it needs a minimum of 1.5 A current output.
- Freestyle V2 is the only HDZero VTX for which the manufacturer states support for 6S VBAT.

※ A fully charged 6S Li-Po battery has 25.2 V (6S LiHV 26.1 V), i.e. above the upper limit of the 7–25 V range. Preferably use a BEC with 6S as well.

3.3 Mounting Considerations

It is very important to keep some distance between the VTX and the ESC/FC boards. The RF portion of the VTX is vulnerable to electronic noise caused by ESC/motors. The RF signal can also be bounced back from surfaces of boards or carbon fiber plates and fed back to the power amplifier in the VTX. This deteriorates the RF signal integrity and could damage the amplifier.

- If the VTX is mounted on the top of the stack, keep a 5 mm distance from the top carbon fiber plate.
- Avoid mounting the VTX in the middle of the stack.
- If the VTX is mounted on the bottom of the stack, it needs to be upside down (U.FL socket faces down) and needs a minimum 5 mm distance from the bottom carbon fiber plate.
- The Freestyle V2 VTX can be mounted with M2 screws or the included double-sided tape. In some cases, it is necessary to mount the VTX with double-sided tape rather than screws to avoid electrical noise when the craft's motors are armed.
- Do not route the antenna cable over the top of the VTX – the antenna cable must exit straight out of the back of the VTX.
- When using GPS, keep it physically separated from the VTX – especially the antenna – to minimize interference with the GPS signal.

3.4 Antenna and U.FL Connector

HDZero VTXes use a U.FL connector for its smaller footprint and lighter weight. However, it is not a mechanically strong connector. Treat it as if it is made of glass.

- Secure the antenna connector and the MIPI cable with the included retention bars and screws.
- If a retaining bar is not used, never run the cable from the U.FL connector straight off the side of the board. Run it towards the middle of the board and secure it as a strain relief – with temperature-resistant glue (e.g. E6000, not on hot components), Kapton tape, or a zip tie to a nearby standoff (be careful not to crush the coax).
- For larger builds, consider a U.FL → SMA pigtail that can be thoroughly secured to the aircraft. A common failure point is where the coax cable is crimped to the SMA jack; if this joint is loose, RF performance will suffer greatly.
- When removing the antenna, do not apply too much stress in any one direction. Use tweezers at the base of the neck of the connector and pull straight up (do not pry), away from the board. There are tools designed to remove/insert U.FL connectors.

4. Configuration

4.1 OSD/MSP Setup (Betaflight)

① **Prerequisite:** flight controller firmware with MSP DisplayPort support – Betaflight, INAV, KISS ULTRA or FlightOne in a current version.

② **Update the firmware** of the VTX and VRX to the latest version: www.hd-zero.com/document.

③ **Solder/connect the VTX UART** to an available UART on your FC board – see the diagram in chapter 3.1.

④ **Flight controller configuration:** connect the FC board to the computer with a USB cable, start Betaflight Configurator, go to the *Ports* tab, activate *VTX (MSP + DisplayPort)* in the *Peripherals* column on the UART used to connect the VTX and click *Save and Reboot*.

※ A soft serial UART is not supported for VTX (MSP + DisplayPort).

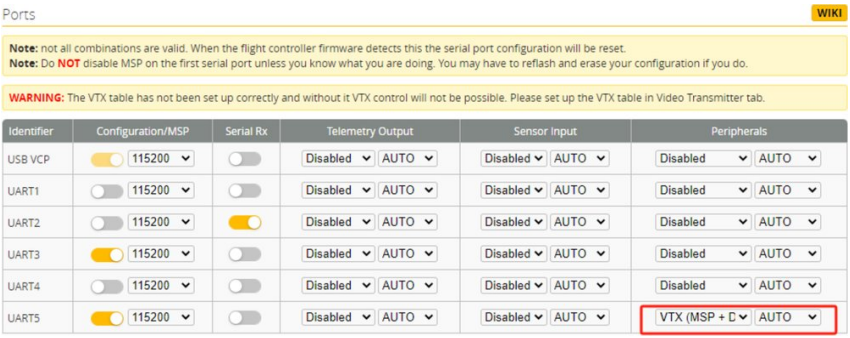

Example: UART5 used for VTX (MSP + DisplayPort)

⑤ **Activate OSD:** reconnect the flight controller, go to the *Configuration* tab, activate the *OSD* function and click *Save*. Then go to the *OSD* tab, configure the items you want to show on your screen and save again.

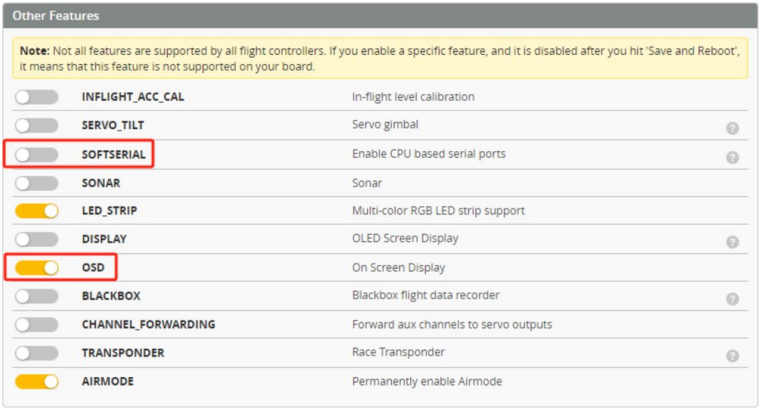

Configuration tab – OSD function activated

4.2 VTX Tables and SmartAudio

The HDZero VTX tables have been integrated into the VTX firmware and are configured automatically at power-on – you don't need to configure them manually. HDZero VTXes no longer support SmartAudio; use MSP OSD instead.

4.3 Stick Command Gestures

The VTX menu, the Betaflight menu and the camera menu are operated with stick gestures on the radio transmitter (while disarmed, motors off).

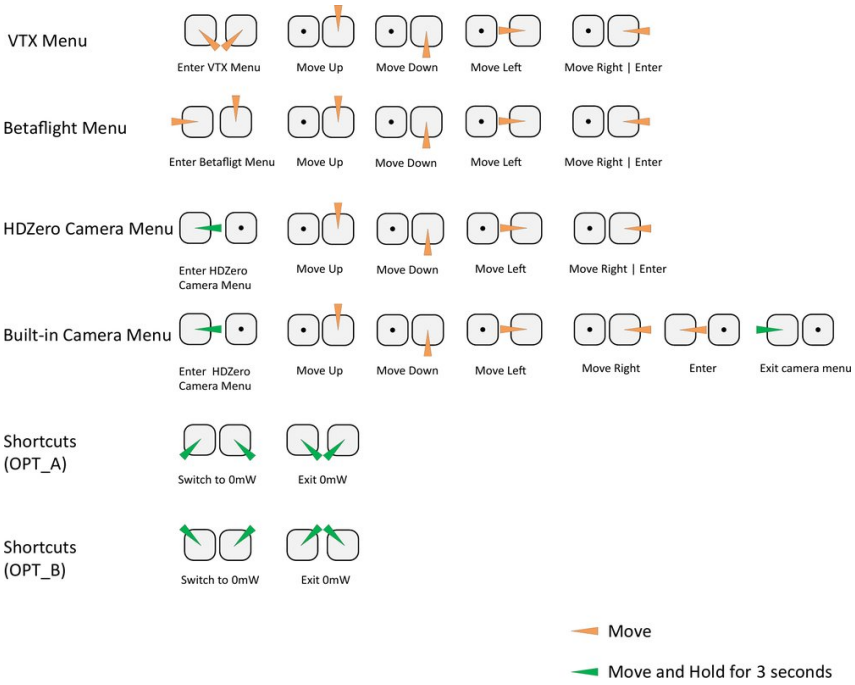

Stick gestures (original manufacturer figure, see table)

Label in figure	Meaning
VTX Menu / Enter VTX Menu	VTX menu / enter VTX menu
Betaflight Menu	Betaflight menu (OSD)
HDZero Camera Menu	HDZero camera menu
Built-in Camera Menu	built-in camera menu
Move Up / Down / Left / Right	move up / down / left / right
Enter	confirm
Exit camera menu	exit camera menu
Shortcuts (OPT_A / OPT_B)	shortcuts A / B
Switch to 0mW / Exit 0mW	switch to 0 mW / exit 0 mW
Move (orange)	move the stick
Move and Hold for 3 seconds (green)	move and hold for 3 seconds

4.4 Using the VTX Menu

The VTX menu is used to set the channel and to manage the RF power level.

Item	Function
CHANNEL	Channel: R1–R8, E1, F1, F2 and F4. You get an additional 8 channels L1–L8 if you unlock the low band.
POWER	Desired RF power level: 25 mW, 200 mW (and 500 mW or MAX after unlock). The actual RF power level depends on the following settings and FC status.
PIT_MODE	**OFF** – RF output set to POWER. **P1MW** – RF output 0.1 mW (does not interfere with other pilots); once armed, RF output is set to POWER within seconds. **0MW** – zero RF output; once armed, RF output is set to POWER within seconds. After the first arm, the VTX will not enter pit mode again until VBAT power is reset. Set to OFF if you don't know how it works.
LP_MODE	**OFF** – RF output set to POWER. **ON** – if PIT_MODE is OFF and the aircraft is disarmed, RF power is forced to 25 mW; when armed, it is set to POWER. **1ST** – if PIT_MODE is OFF, RF power is forced to 25 mW at power-on; when armed, it is set to POWER. After the first arm, LP mode is not entered again until VBAT power is reset. Set to OFF if you don't know how it works.
OFFSET_25MW	Fine-tunes the RF output to exactly 25 mW. Range −10 to 10, step size about 0.1 dB. Set to 0 if you don't know how it works.
TEAM_RACE	**OFF** – RF power after power-on is determined by the other settings. **MODE1** – RF remains off (0 mW) after power-up; exits 0 mW when armed, by stick command, or when VTX power is configured to non-0 mW through the FC UART. If UART communication with the FC is lost, the VTX turns off RF until communication is restored and the VTX is repowered. **MODE2** – RF remains off (0 mW) after power-up; exits 0 mW when armed, by stick command, or when VTX power is configured to non-0 mW through the FC. Set to OFF if you don't know how it works.
SHORTCUTS	Selects the stick command for switching to / exiting 0 mW: OPT_A or OPT_B (see chapter 4.3).

※ The VTX still becomes hot in P1MW mode. Keep it on 0 mW when it will be idle for a while – the goggles will have no live video, but it comes back as soon as the aircraft is armed.

4.5 Typical Settings

▶ Racing or daily practice

Channel: assigned number · Power: 25mW · PIT_MODE: OFF · LP_MODE: OFF · OFFSET_25MW: 0 · TEAM_RACE: OFF · SHORTCUT: OPT_A

- While waiting for the arm command from the race director, use the OPT_A stick command to enter 0 mW to avoid VTX overheating (no video in the goggles).
- Right before the arm command, use the OPT_A stick command to exit 0 mW – you will have video in the goggles right away.

▶ Team racing

Channel: assigned number · Power: 25mW · PIT_MODE: OFF · LP_MODE: OFF · OFFSET_25MW: 0 · TEAM_RACE: MODE1 · SHORTCUT: OPT_A

- When the VTX boots up, it is on 0 mW. It starts to transmit when armed or when 0 mW is exited with the OPT_A stick command.
- When you crash during the race, your VTX might continue transmitting and interfere with your teammate's video on the same channel. Disarm and use the OPT_A stick command to enter 0 mW (works only if your FC still functions).
- The VTX automatically switches to 0 mW after several seconds if it fails to communicate with the FC (e.g. the FC was damaged in a crash).

5. VTX LED Pattern

The VTX has two LEDs: red and blue.

5.1 Red LED

The red LED serves as the power indicator. A healthy unit displays a steady red light. If it is off or flashing, this signals a VTX failure. If there is no red light, check if the power wires to the VTX are connected and check with a multimeter that the voltage is as expected.

5.2 Blue LED

The blue LED is the working status indicator and stays steadily lit under normal operating conditions. Upon boot, three rapid flickers confirm that MSP communication with the FC is active. Specific modes are represented with patterns of long (1 s) and short (¼ s) pulses within a 4-second timeframe.

Blue LED	Meaning	What to do
2 short flashes	Camera not detected	Reseat the MIPI cable on VTX and camera. Check if the MIPI cable or connectors are damaged. Replace the camera.
3 short flashes	Over-heating	Use a fan to cool the VTX.
4 short flashes	RF failure	Replace the VTX.
1 long, 1 short	In 0 mW mode	Use the stick command to exit 0 mW.
1 long, 2 short	In 0.1 mW mode	Turn off PIT mode.

※ The first three patterns indicate error conditions and take priority over all others. If an error is active (such as heat protection), it overrides other settings – setting the VTX to 0 mW won't visibly change the LED.

6. VTX Firmware Update

Update the VTX firmware to the latest version to ensure compatibility with the latest cameras, flight controller software and video receivers. It is not required for the VTX firmware version to match the video receiver version, but it is recommended.

6.1 HDZero VTX Programmer

It is highly recommended to use the **HDZero VTX Programmer** (not included) to update the VTX. Only Windows is supported for now.



HDZero VTX Programmer (sold separately)

① Download *HDZeroProgrammer.zip* from www.hd-zero.com/document.

② Extract *HDZeroProgrammer.exe* to *C:\HDZero* and launch it. All compatible HDZero VTX models will automatically appear in the list.

③ Select the VTX type *Freestyle v2*.

④ *Load Online Firmware* fetches firmware from GitHub and lets you select the one you want to use, or *Load Local Firmware* specifies a local *HDZERO_TX.bin*.

⑤ Click *Flash VTX* to start the updating process.

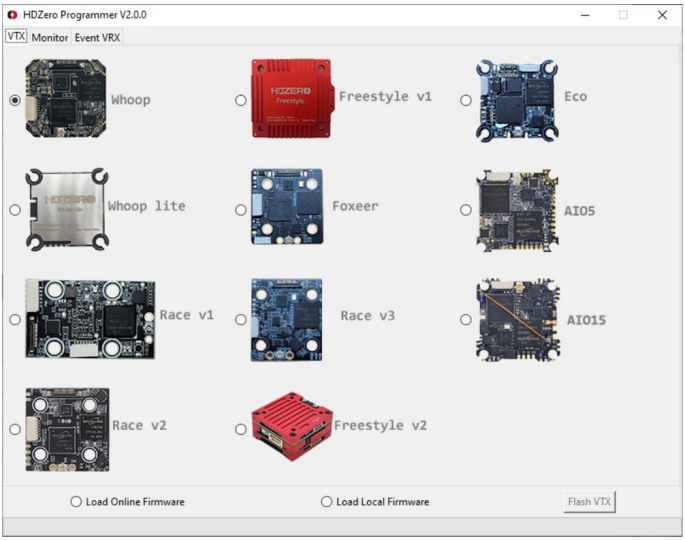

HDZero Programmer window

6.2 Download VTX Firmware

If you are behind a firewall that restricts access to GitHub, download the firmware manually from the *VTX Firmware* section at www.hd-zero.com/document and flash it locally. The file is named *HDZEROVTX_RevYYYYMMDD.zip*, where YYYYMMDD denotes its release date. It includes firmware for all compatible VTX and AIO models; the folder for each type contains the *HDZERO_TX.bin* file for that VTX type.

6.3 Update with HDZero Goggle

The HDZero goggle can flash firmware to an HDZero VTX via its FW port:

① Copy *HDZERO_TX.bin* to the root directory of an SD card formatted as FAT32.

② Power on the goggle.

③ Connect the VTX and the goggle with the programming cable.

④ Go to *Main menu* → *Firmware* → *Update VTX*; the display will show the status of the flashing process.

⑤ Disconnect the VTX – it is now flashed with the new firmware.

6.4 Update with HDZero Receiver

① Format the SD card (FAT32, allocation unit size 4096 bytes).

② Power off the VRX if it is on.

③ Unzip *HDZERO_TX.bin* for your VTX type onto the SD card and insert it into the VRX module.

④ Connect the cable between the module and the VTX.

⑤ Power on the VRX module.

⑥ If “Wait to Connect VTX...” or “Check cable...” appears, make sure step ④ is secured.

⑦ If “Firmware update failed” appears, repeat from step ①.

⑧ “Firmware update successful” means the VTX is updated. The *HDZERO_TX.bin* file is removed from the SD card automatically.

※ An empty file named *DONOTREMOVE.txt* in the SD card root directory prevents *HDZERO_TX.bin* from being removed – useful when updating multiple VTXes.

6.5 Unlock RF Power Limit

The Freestyle V2 VTX is limited to 25 mW / 200 mW out of the box, but it is capable of up to 900 mW. The higher power may only be used with the required authorisation (e.g. a HAM radio licence). The special firmware is in the *Utilities* section at www.hd-zero.com/document.

※ In the Czech Republic, a maximum of 25 mW e.i.r.p. is permitted in the 5725–5875 MHz band without special authorisation – see chapter 1.2.

① Download the firmware *Unlock_FreestyleVTX.zip*.

② Unzip it to the root directory of the SD card.

③ Flash this firmware to the VTX.

④ Power on the VTX with main battery power. The blue LED flashes 3 times when the unlock is done.

⑤ Power the VTX off.

⑥ Unzip the normal VTX firmware to the root directory of the SD card.

⑦ Flash this firmware to the VTX.

⑧ The higher RF output options are now available.

Follow the steps strictly and **do not skip step ④**. Once unlocked, there is no need to unlock the VTX again when newer firmware is available.

6.6 Unlock Low Band

The low band channels (L1–L8) need to be unlocked before they can be used. Make sure your region allows the low band before unlocking.

① Download *Unlock_Lowband.zip* from www.hd-zero.com/document.

② Unzip it and flash it as a firmware update to your VTX.

③ Power on the VTX with main battery power. The blue LED flashes 5 times and then goes out to indicate that the unlock has completed.

④ Flash the latest release firmware to your VTX. When you switch channels in the VTX menu, you will see the additional channels L1–L8.

Follow the steps strictly and **do not skip step ③**.

7. Troubleshooting

7.1 Community and Support

HDZero Facebook Group: www.facebook.com/groups/HDZero
HDZero Discord Server: https://discord.gg/JPesSHpmCU

7.2 FAQ

Problem	Cause and solution
Red LED blinks or is off	Check the power connection. Make sure the input voltage is within 7–25 V. The power source must provide sufficient current – the Freestyle V2 VTX can require up to 15 W; some flight controllers may not supply adequate amperage. The VTX's power circuit may be damaged.
Blue LED blinks or is off	Absence of the blue LED suggests a critical failure of the VTX. Three rapid flickers upon boot confirm MSP communication. In normal operation the LED is steadily lit; if it blinks, see the table in chapter 5.2.
Snow noise at minimal range	The VTX is in P1MW mode (1 long and 2 short blue flashes). High RF power with the goggles too close causes signal saturation – lower the RF power and increase the separation. Position the radio receiver and its antenna away from the VTX. Do not place the VTX next to the ESC board. Keep 5 mm vertical clearance on the antenna side. Replace the antenna or pigtail. Verify that no other VTX (analog, DJI, HDZero) is on the same channel and check for Wi-Fi interference (diagonal noise patterns). Faulty RF circuit on the VTX.
Video works, but no OSD	The VTX retrieves telemetry from the FC via MSP and transmits it to the goggles, where it is overlaid onto the video. Update the VTX and goggle/receiver to the latest firmware. FC TX must be connected to VTX RX and FC RX to VTX TX. Check the Betaflight settings (chapter 4.1). Try another UART on the FC (avoid soft serial and SA ports) or another FC.
Video becomes noisy when armed and throttle is applied	Noisy/insufficient power to the VTX. Make sure the BEC can supply adequate amperage. Install a large capacitor (≥ 350 µF, 50 V) across the battery leads. The radio transmitter may also affect the video receiver – lower its power and keep it well away from the goggles.

Problem	Cause and solution
No video in the goggles	Blue LED not solid: off – the VTX is bad; 1 long and 1 short flash – the VTX is in 0 mW mode, exit with the stick command; 2 short flashes – camera not detected (damaged camera, bad or loose MIPI cable, damaged MIPI connectors, damaged VTX). Blue LED solid: verify whether the VTX is set to low band while the goggles are configured differently, or vice versa. If the Nano 90 camera is configured to 540p60 mode, the goggles must be set to *HDZero BW = Narrow* (*Goggle Menu → Source → HDZero BW*).
VTX fails to flash	All pins on the VTX and the FW port of your goggles must be perfectly straight – a single bent pin can disrupt the flashing process.
FC drops to bootloader	Affects early-production HDZero VTXes: add a 200 Ω resistor in-line between FC UART TX and VTX UART RX. All HDZero VTX units produced after 2023 already include this resistor.

8. Information for the EU and Czech Market

8.1 Importer and responsible person in the EU

The product is placed on the European Union market by the importer stated below, who is at the same time the responsible person within the meaning of Article 16 of Regulation (EU) 2023/988 of the European Parliament and of the Council on general product safety (GPSR).

Importer / responsible person in the EU	Rotorama, s.r.o.
Company ID (IČO)	051 57 692
VAT ID (DIČ)	CZ05157692
Registered office	Okrajová 1351, 674 01 Třebíč, Czech Republic
E-mail	info@rotorama.cz
Phone	+420 252 252 098
Website	www.rotorama.com

8.2 Product conformity

CE

- The product bears the **CE** marking and complies with the requirements of the applicable European Union harmonisation legislation.
- A copy of the **EU Declaration of Conformity** is available from the importer at the address stated above or at the e-mail address info@rotorama.cz.
- **Product identification:** the type designation (HDZero Freestyle V2, HDZ3131) and the manufacturer (Divimath, Inc.) are printed on the VTX case.

8.3 Disposal of electrical equipment



- The crossed-out wheeled bin symbol on the product, its packaging or in the documentation means that at the end of its service life the product **must not be disposed of together with mixed municipal waste**.
- Hand it over at a take-back point for electrical equipment – at a collection yard, at a take-back point of a collective system, or at the retailer when purchasing a new equivalent product. Take-back is free of charge for the end user.
- The obligations under Act No. 542/2020 Coll., on end-of-life products, are fulfilled by the importer through a collective take-back system.
- Proper disposal helps prevent negative impacts on the environment and human health and contributes to the reuse of secondary raw materials.

Through its contractual partner **ASEKOL a.s.**, the company ensures the take-back of waste electrical equipment from households and the separate collection of waste electrical equipment, batteries and accumulators in accordance with the applicable legislation. The customer is entitled to hand over old electrical equipment or a battery or accumulator at any collection point of the above contractual partner. The addresses of these take-back points are listed at www.asekol.cz, www.ecobat.cz and also https://visoh2.mzp.cz/RegistrMistZO/RegistrMistZOPublic/MapaMistZpetOdberu.

9. Warranty and rights arising from defective performance

9.1 Rights of the buyer under Czech law

The rights and obligations of the contracting parties are governed by Czech law, in particular by Act No. 89/2012 Coll., the Civil Code, and Act No. 634/1992 Coll., on consumer protection. The manufacturer's warranty terms set out below (Chapter 9.2) **do not in any way limit** the buyer's rights arising from these regulations.

- The seller is liable to the buyer for the product being free of defects on receipt. If the buyer is a consumer, a defect may be notified **within two years of receipt** of the product (Section 2165 of the Civil Code).
- If a defect appears within **one year** of receipt, the product is deemed to have been defective already at the time of receipt (Section 2161(5) of the Civil Code).
- When purchasing online, a consumer has the right to **withdraw from the contract within 14 days** of receiving the goods without giving a reason (Section 1829 of the Civil Code).
- Claims should be made with the retailer from whom you purchased the product. The importer's contact details are given in Chapter 8.1.
- The competent body for out-of-court settlement of consumer disputes is the **Czech Trade Inspection Authority**, Štěpánská 796/44, 110 00 Prague 1, www.coi.cz.

9.2 Manufacturer's warranty terms

❊ The following text is the manufacturer's original warranty statement.

Due to the nature of this hobby, the manufacturer accepts warranty claims only for items determined to be Dead on Arrival (DOA). The manufacturer does not cover any damages resulting from crashes, misuse or improper handling.

The manufacturer's warranty does not cover, among others:

- minor or major crashes,
- hard landings,
- faulty soldering,
- incorrect polarity connection,
- insufficient cooling,
- powering the device without an antenna.

Manufacturer contact: support@divimath.com