Volador VX3.5 O4

FlyFishRC · 3.5" FPV drone frame
Assembly and user manual



The frame is supplied as a kit without electronics. Always carry out assembly with the battery disconnected and the propellers removed.

User manual · www.rotorama.com

Contents

1. Safety instructions

2. Product description

2.1 Intended use

2.2 Specifications

2.3 Parts list

2.4 Not included

3. Frame assembly

3.1 Before assembly

3.2 Assembly steps

3.3 Screw layout

3.4 Installing the electronics

4. Operation and maintenance

4.1 Check after assembly and before every flight

4.2 Operating the assembled drone

4.3 Maintenance

5. Information for the EU and Czech Market

5.1 Importer and responsible person in the EU

5.2 Disposal

6. Warranty and rights arising from defective performance

1. Safety instructions

The frame is a kit for building an FPV drone. An assembled drone with rotating propellers and a powerful battery can cause serious injury or damage to property. Before assembly, read this entire manual and the manuals of all components you install in the frame.

- Always carry out assembly, repairs and setup **with the battery disconnected and the propellers removed**. Fit the propellers only after checking the complete build.
- Carbon fibre composite is **electrically conductive**. Make sure that the edges of the plates and arms do not touch exposed wires, solder pads or electronics.
- Do not sand or drill carbon edges without protection. Do not inhale carbon dust and protect your eyes and skin from it – work with safety glasses and a dust mask.
- Use tools that match the screw size. A worn hex key easily damages the screw head.
- Keep small parts (screws, standoffs, silicone parts) out of the reach of children – they could be swallowed.
- Neither the frame nor the assembled drone is a toy, and they are not intended for children.

2. Product description

2.1 Intended use

The FlyFishRC Volador VX3.5 O4 is a freestyle FPV drone frame for 3.5" propellers in a Squashed X configuration. It is designed for the **DJI O4 Air Unit Pro** digital system, for whose camera it has a CNC mount with silicone vibration dampers; it also accepts analog and other HD systems with a 19 mm or 20 mm camera.

The plates and arms are made of T700 carbon fibre with chamfered edges, and the camera mount is CNC machined from aluminium alloy. The frame comes with TPU parts (arm guards, front bumper, antenna and receiver holder) and hardware with thread-locking adhesive applied.



Volador VX3.5 O4 frame (illustrative render by the manufacturer)

2.2 Specifications

The data are taken from the FlyFishRC product page and apply to the VX3.5 size.

Parameter	Value
Configuration	Squashed X
Propeller size	3–3.5"
Wheelbase	160 mm
Total dimensions	127.5 × 148 mm
Weight	70.5 g (with TPU parts)
Material	T700 carbon fibre; CNC parts made of aluminium alloy
Arm thickness	3.5 mm
Top plate thickness	2 mm
Middle plate thickness	2.5 mm
Bottom plate thickness	2.5 mm
CNC camera side plate thickness	5 mm
FPV camera width	19 mm / 20 mm
Stack mounting holes	20 × 20 mm / 25.5 × 25.5 mm (M2)
VTX mounting holes	20 × 20 mm / 25.5 × 25.5 mm (M2)
Motor mounting holes	9 × 9 mm / 12 × 12 mm (φ 2 mm)
Colour of TPU parts	depending on version (black / yellow)
Product designation	FlyFishRC Volador VX3.5 O4 Pro Freestyle Frame Kit
Manufacturer	FlyFishRC, Room 4F, Kaizhong Smart Park, No. 8 Hua'an Road, Zhongkai High-tech District, Huizhou City, Guangdong Province, China; sales@flyfishrc.com; www.flyfishrc.com

2.3 Parts list

The numbers in the table correspond to the numbers in the exploded view. The manufacturer's drawings are shared by both sizes of the Volador VX frame series; the shape of the parts may differ in detail.

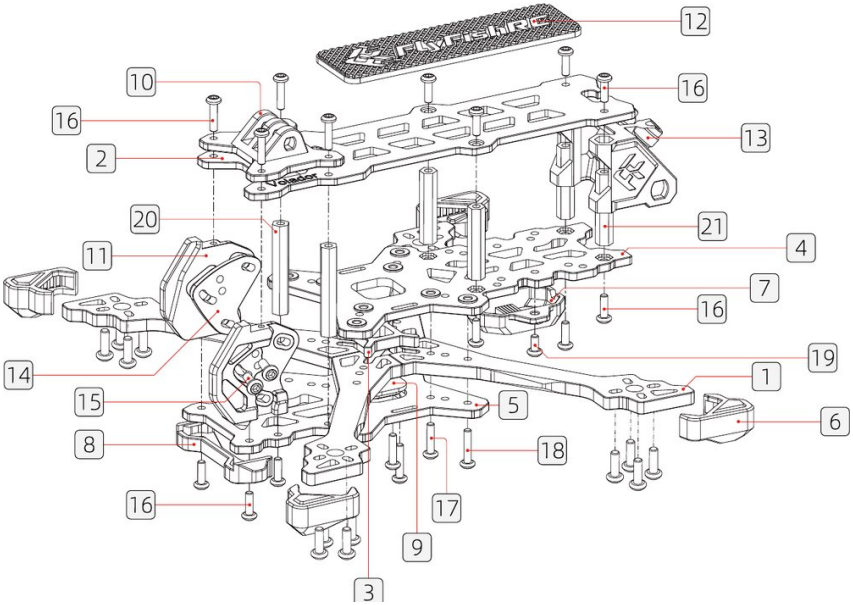

Exploded view of the frame

No.	Part	Qty
1	3.5 mm arm, carbon fibre	4×
2	2 mm top plate, carbon fibre	1×
3	3 mm keystone, carbon fibre	1×
4	2.5 mm middle plate, carbon fibre	1×
5	2.5 mm bottom plate, carbon fibre	1×
6	Arm guard, TPU	4×
7	Receiver holder, TPU	1×
8	Front bumper, TPU	1×
9	Silicone logo	1×
10	Base mount	1×
11	CNC camera mount (L/R)	1 pair
12	Battery anti-slip pad	1×

No.	Part	Qty
13	O4 antenna and receiver holder, TPU	1×
14	Silicone camera vibration dampers (L/R)	1 pair
15	M2×4 button head hex screw	4×
16	M2×6 button head hex screw	34×
17	M2×8 button head hex screw	4×
18	M2×9 button head hex screw	4×
19	M2×5 button head hex screw	2×
20	M2×25 hex aluminium standoff	2×
21	M2×20 hex aluminium standoff	4×

2.4 Not included

The frame is supplied without electronics. To build a flight-ready drone, you will need in particular:

- four motors with a mounting hole pattern of 9 × 9 mm or 12 × 12 mm and 3–3.5" propellers,
- a flight controller (FC) and electronic speed controllers (ESC) in a 20 × 20 mm or 25.5 × 25.5 mm stack format,
- a video transmission system – for example the DJI O4 Air Unit Pro, or an analog or other HD system with a 19 mm / 20 mm camera,
- an RC receiver and radio transmitter, a battery, a battery strap and FPV goggles,
- tools: hex keys or a screwdriver for M2 screws, a soldering iron and cable management accessories.

3. Frame assembly

3.1 Before assembly

- Check against the list in Chapter 2.3 that the package contains all parts. Sort the screws by length – they look very similar.
- The hardware comes with thread-locking adhesive applied at the factory. When refitting a screw that you have loosened, secure it with fresh medium-strength threadlocker.
- First tighten the screws only lightly and tighten them crosswise only after all parts are seated. Do not overtighten the screws – the threads in the aluminium standoffs can strip.

3.2 Assembly steps

The manufacturer describes the assembly in four illustrated steps. Numbers in brackets refer to the parts list in Chapter 2.3; the positions and lengths of the screws are shown in Chapter 3.3.

※ Install the electronics (stack, VTX, receiver, camera and motors) in the order that suits your build – usually before fitting the top plate.

▶ Step 1/4 – lower part of the frame

Assemble the arms (1) with the keystone (3), middle plate (4) and bottom plate (5) and screw them together. Screw the standoffs (20) and (21) into the plates.

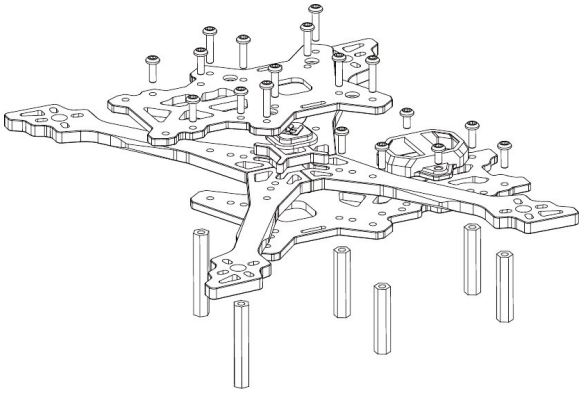

Step 1/4

▶ Step 2/4 – CNC camera mount and TPU parts

Attach the CNC camera mount (11) with the silicone dampers (14), the front bumper (8), the receiver holder (7), the antenna holder (13) and the arm guards (6).

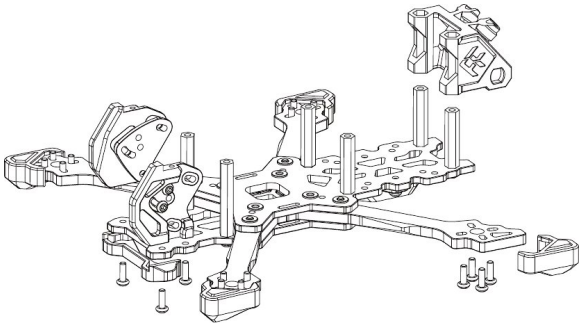

Step 2/4

▶ Step 3/4 – top plate

Attach the base mount (10) to the top plate (2) and stick on the anti-slip pad (12). Screw the top plate to the standoffs using M2×6 screws (16).

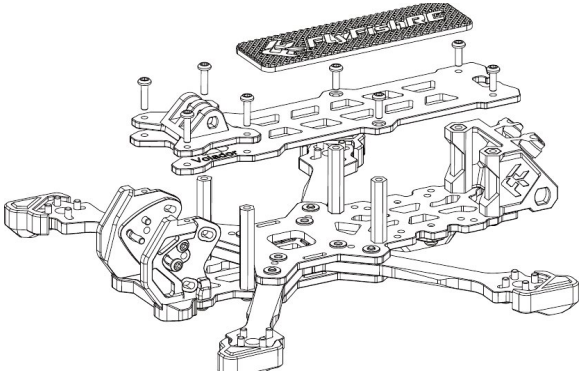

Step 3/4

▶ Step 4/4 – completed frame

Check that all screws are in place and tightened.

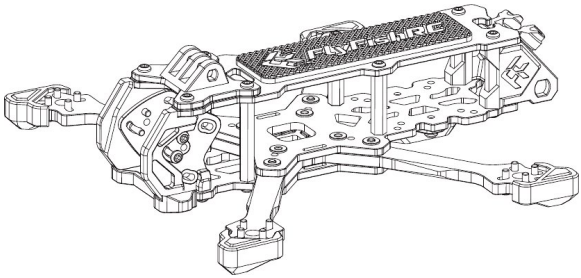

Step 4/4 – assembled frame

3.3 Screw layout

Screw	Qty	Colour of the dot in the diagram
M2×6	8×	green – top side
M2×6	26×	yellow – bottom side
M2×9	4×	dark blue – bottom side
M2×8	4×	purple – bottom side
M2×5	2×	light blue – bottom side

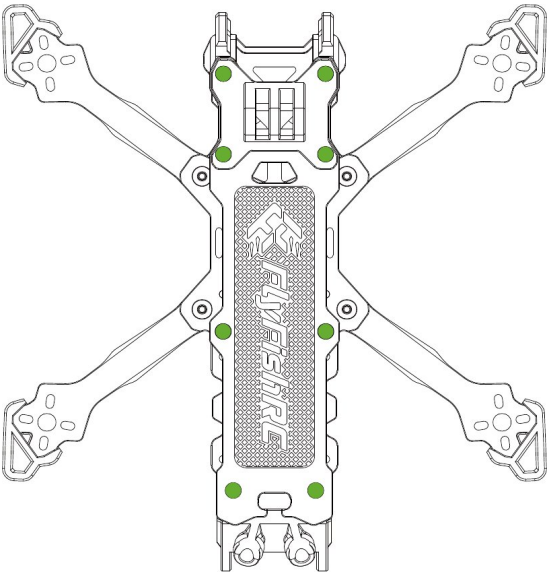

Top side: 8× M2×6

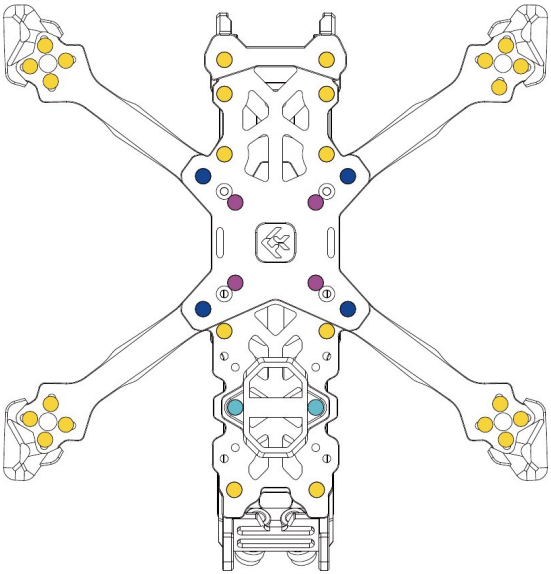

Bottom side: 26× M2×6, 4× M2×9, 4× M2×8, 2× M2×5

3.4 Installing the electronics

- The **stack (FC and ESC)** and the **VTX** are mounted on 20 × 20 mm or 25.5 × 25.5 mm holes with M2 screws. Use silicone grommets under the electronics boards to reduce vibration transfer.
- The **DJI O4 Air Unit Pro camera** is inserted into the CNC mount (11) with the silicone dampers (14). A 19 mm or 20 mm camera can also be fitted in the mount. After setting the camera tilt, tighten the screws and check that the camera does not wobble in the mount.
- The **motors** are attached to 9 × 9 mm or 12 × 12 mm holes. Motor screws must not be longer than the motor thread allows – a screw that is too long will touch the windings and destroy the motor.
- Route the motor wires so that they do not run over sharp carbon edges and cannot get into the propeller. Fix the antennas in the TPU holder (13).
- The anti-slip pad (12) prevents the battery from slipping out. Always secure the battery with a strap.

4. Operation and maintenance

4.1 Check after assembly and before every flight

- All frame and motor screws are in place and tightened, none is missing.
- The motors turn freely by hand, without rubbing and without touching the wires.
- No wire lies on a sharp carbon edge or reaches into the propeller area.
- The arms and plates have no cracks, chipped edges or delaminated carbon.
- The battery is secured with a strap and cannot move. Fit the propellers in the correct direction of rotation as the very last step.

4.2 Operating the assembled drone

Regulations (EU) 2019/947 and 2019/945 apply in all Member States of the European Union, but the national implementing rules differ from country to country – registration portals, minimum pilot age, geographical zones, mandatory insurance, permitted frequency bands and maximum transmitting power. The information in this chapter describes the situation in the Czech Republic. If you operate the drone in another country, you must follow the regulations of the country in which you fly.

- A drone built on this frame has no C0–C4 class. It is operated as a privately built unmanned aircraft system in the open category – in subcategory A1 with a take-off mass below 250 g, otherwise in subcategory A3. Actually weigh the take-off mass including the battery and accessories.
- If the drone has a camera, the operator must be **registered** (in the Czech Republic with the Civil Aviation Authority) and the registration number must be displayed on the drone.
- Observe the operational limits of the open category: a maximum height of 120 m, do not fly over assemblies of people, and in subcategory A3 keep a distance of 150 m from residential, commercial, industrial and recreational areas.
- When flying with FPV goggles, an observer who watches the drone with direct visual contact must stand next to the pilot.
- The operator is responsible for the transmitting power and frequency settings. We recommend liability insurance.

4.3 Maintenance

- Inspect the arms and plates after every harder crash. Replace an arm with a crack, a chipped edge or delaminated carbon immediately – it may break in flight.
- Regularly check that the screws are tight, especially the motor screws and the CNC camera mount screws.
- Clean the frame with a dry or slightly damp cloth. Do not use solvents, which may damage the TPU and silicone parts.

5. Information for the EU and Czech Market

5.1 Importer and responsible person in the EU

The product is placed on the European Union market by the importer stated below, who is at the same time the responsible person within the meaning of Article 16 of Regulation (EU) 2023/988 of the European Parliament and of the Council on general product safety (GPSR).

Importer / responsible person in the EU	Rotorama, s.r.o.
Company ID (IČO)	051 57 692
VAT ID (DIČ)	CZ05157692
Registered office	Okrajová 1351, 674 01 Třebíč, Czech Republic
E-mail	info@rotorama.cz
Phone	+420 252 252 098
Website	www.rotorama.com

5.2 Disposal

- The frame contains no electronics or batteries and is not electrical equipment.
- Dispose of the carbon plates and arms with mixed waste unless your municipality specifies otherwise. Do not burn the carbon composite – harmful fumes are produced when it burns.
- Hand in the aluminium CNC parts and standoffs as metal waste, for example at a collection yard.
- Dispose of the TPU and silicone parts with mixed waste unless your municipality specifies otherwise. Sort the packaging according to its material (paper, plastic).
- Follow the waste management rules applicable in the municipality or country where you dispose of the frame.

6. Warranty and rights arising from defective performance

The rights and obligations of the contracting parties are governed by Czech law, in particular by Act No. 89/2012 Coll., the Civil Code, and Act No. 634/1992 Coll., on consumer protection.

- The seller is liable to the buyer for the product being free of defects on receipt. If the buyer is a consumer, a defect may be notified **within two years of receipt** of the product (Section 2165 of the Civil Code).
- If a defect appears within **one year** of receipt, the product is deemed to have been defective already at the time of receipt (Section 2161(5) of the Civil Code).
- When purchasing online, a consumer has the right to **withdraw from the contract within 14 days** of receiving the goods without giving a reason (Section 1829 of the Civil Code).
- Claims should be made with the retailer from whom you purchased the product. The importer's contact details are given in Chapter 5.1.
- The competent body for out-of-court settlement of consumer disputes is the **Czech Trade Inspection Authority**, Štěpánská 796/44, 110 00 Prague 1, www.coi.cz.