GEP-Vapor-X5 Frame

Frame for a 5-inch FPV drone
User Manual



Read this entire manual before building and before the first flight, and keep it for future reference.

Manufacturer: GEPRC · EU importer: Rotorama, s.r.o. · www.rotorama.com

Contents

1. Product description

1.1 Intended use

1.2 Specifications and package contents

1.3 Parts overview

2. Building and use

2.1 What you will need

2.2 Recommended build procedure

2.3 Screw connections

2.4 Replacing an arm

3. Safety instructions

3.1 During the build

3.2 When operating the finished drone

4. Maintenance and inspection

5. Information for the EU and Czech Market

5.1 Importer and responsible person in the EU

5.2 Disposal

6. Warranty and rights arising from defective performance

1. Product description

1.1 Intended use

The **GEPRC GEP-Vapor-X5 Frame** is a carbon fibre frame for building a 5-inch FPV drone intended mainly for freestyle flying. The frame uses a wide X arm layout which, according to the manufacturer, improves stability and manoeuvrability. The arms are made of 5 mm thick carbon fibre plate; the camera is protected by side panels and a front guard.

The frame is a kit part – **it cannot fly on its own**. It serves as the supporting structure into which the user installs motors, a flight controller (FC), electronic speed controllers (ESC), a camera, a video transmitter (VTX), a receiver and other equipment. The mounting holes allow both analogue and digital video systems to be installed; an action camera mount is also included.



GEP-Vapor-X5 Frame – front view (manufacturer's illustrative rendering)

1.2 Specifications and package contents

Parameter	Value
Product designation	GEP-Vapor-X5 Frame (GEPRC, SKU GP107336)
Wheelbase (motor diagonal)	230 mm
Recommended propeller size	5"
Top plate thickness	2.0 mm
Middle plate thickness	2.0 mm
Arm thickness	5.0 mm
Bottom plate thickness	2.5 mm
FC / stack mounting	20 × 20 mm / 30.5 × 30.5 mm
VTX mounting	20 × 20 mm / 25 × 25 mm / 30.5 × 30.5 mm
Motor mounting	16 × 16 mm
Camera width	19 mm / 20 mm
Frame weight	185.6 g ± 2 g (manufacturer's figure)

▶ Package contents

- 1× GEP-Vapor-X frame
- 2× battery strap 20 × 250 mm
- 2× silicone anti-slip battery pad
- 1× set of screws
- 1× set of 3D printed parts (including an action camera mount)
- 3× L-key (1.5 mm, 2 mm and 3 mm)
- 1× M8 wrench

※ The package does NOT include any electronics or propulsion: motors, flight controller (FC), speed controllers (ESC), camera, video transmitter (VTX), receiver, antennas, propellers, battery or action camera.

1.3 Parts overview

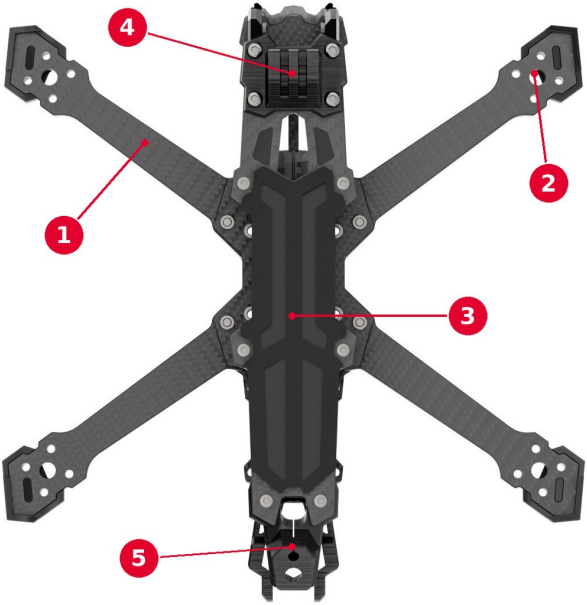

GEP-Vapor-X5 frame – top view (manufacturer's illustrative rendering)

① Arm made of 5 mm carbon fibre plate – all four arms are separate and replaceable

② Motor mount – holes with 16 × 16 mm spacing

③ Top plate with anti-slip battery pad

④ Front section with action camera mount; below it, the FPV camera sits between the side panels

⑤ Rear section of the frame with antenna holders

2. Building and use

2.1 What you will need

To build a working drone, you need to purchase components that match the mounting dimensions of the frame:

- 4 motors with 16 × 16 mm mounting holes, suitable for 5" propellers,
- a flight controller (FC) and speed controllers (ESC) – separately or as a stack with 20 × 20 mm or 30.5 × 30.5 mm spacing,
- an FPV camera 19 mm or 20 mm wide,
- a video transmitter (VTX) with 20 × 20 mm, 25 × 25 mm or 30.5 × 30.5 mm spacing, or a digital video system,
- a radio receiver and antennas,
- 5" propellers and a Li-Po battery suitable for the chosen power system,
- tools: soldering iron, solder, flux, side cutters, heat-shrink tubing, cable ties and medium-strength threadlocker.

The 1.5 mm, 2 mm and 3 mm L-keys and the M8 wrench are included in the package.

2.2 Recommended build procedure

The manufacturer does not publish detailed assembly instructions for this frame. Below is a general procedure corresponding to a typical 5-inch FPV drone build. Choose screws from the included set by length so that each joint holds firmly and no screw protrudes anywhere.

① Lay out all parts and check them against the package contents. Inspect the carbon plates for cracks or delamination.

② Assemble the lower part of the frame – bottom plate and arms – and tighten the screws that hold the arms.

③ Screw in the standoffs and mount the flight controller (FC) and speed controllers (ESC) on the damping grommets supplied with the electronics. The arrow on the FC should point forward; otherwise set the board orientation in the configurator.

④ Screw the motors to the arms. Make sure the motor screws do not touch the windings – the motor must turn freely by hand.

⑤ Insert the FPV camera between the side panels at the front of the frame and install the video transmitter (VTX) and receiver.

⑥ Fix the antennas in the 3D printed holders at the rear so that they cannot reach the propellers.

⑦ Solder the wires and check the joints and insulation. Route the wires away from sharp edges and out of reach of the propellers.

⑧ Fit the top plate, the anti-slip pad and the battery straps; attach the action camera mount if required.

⑨ Install the propellers only after the drone has been fully configured in the configurator and the motor direction has been checked.

2.3 Screw connections

- Tighten screws with care. Overtightening can damage the thread in an aluminium standoff or nut and crush the carbon plate.
- Use medium-strength threadlocker on metal threads (motor screws, standoffs). Do not apply threadlocker to plastic or 3D printed parts – it may damage them.
- Check that all screws are tight after the first flights and after every crash.

2.4 Replacing an arm

The arms are separate parts and the manufacturer also supplies them as a spare part (*Arm Plate-X5*). To replace an arm, disconnect the battery, remove the propeller, unscrew the motor from the damaged arm and loosen the screws that hold the arm in the frame. Insert the new arm in the same position, tighten the screws and screw the motor back on. Check the routing of the motor wires before flying.

3. Safety instructions

3.1 During the build

- **Carbon fibre composite is electrically conductive.** Wires, solder pads and electronic boards must not touch the carbon plates – this could cause a short circuit and a battery fire. Mount the electronics on insulating grommets and protect the wires with tubing.
- The edges of carbon plates may be sharp. Do not use damaged parts with cracks or peeling layers.
- Do not sand or drill carbon plates without protection. Carbon composite dust irritates the skin and respiratory tract; work wet, wearing a dust mask and gloves.
- Solder in a well-ventilated area on a non-flammable surface.
- Keep small parts and screws out of the reach of children. This product is not a toy.

3.2 When operating the finished drone

- Rotating propellers can cause serious injury. Always remove the propellers when working on the drone with the battery connected.
- Connect the Li-Po battery only just before the flight, never leave it unattended and do not use a damaged or swollen cell. End the flight at 3.5 V per cell at the latest.
- Always secure the battery firmly with both straps. A loose battery can get into the propellers during flight.
- The finished drone is an unmanned aircraft. In the European Union its operation is governed by Regulation (EU) 2019/947; however, national implementing rules differ from country to country (operator registration, pilot competency, zones, insurance, frequencies and transmitter power). **The law of the country in which you operate the drone always prevails.** In the Czech Republic, the rules of the Civil Aviation Authority apply (www.caa.gov.cz).

4. Maintenance and inspection

- After every crash, inspect the arms and plates. Replace any arm with a crack, bend or delamination – it may break in flight.
- Check the tightness of the motor, arm and standoff screws.
- Check the side panels and the camera mounting for looseness or cracks.
- 3D printed parts (antenna holders, action camera mount) wear out in crashes; replace damaged ones.
- Replace the battery straps and the anti-slip pad if they are torn or no longer hold the battery reliably.
- Clean the frame with a dry or slightly damp cloth, always with the battery disconnected.

5. Information for the EU and Czech Market

5.1 Importer and responsible person in the EU

The product is placed on the European Union market by the importer stated below, who is at the same time the responsible person within the meaning of Article 16 of Regulation (EU) 2023/988 of the European Parliament and of the Council on general product safety (GPSR).

Importer / responsible person in the EU	Rotorama, s.r.o.
Company ID (IČO)	051 57 692
VAT ID (DIČ)	CZ05157692
Registered office	Okrajová 1351, 674 01 Třebíč, Czech Republic
E-mail	info@rotorama.cz
Phone	+420 252 252 098
Website	www.rotorama.com

5.2 Disposal

The frame itself is not electrical equipment. It is made of carbon fibre composite, aluminium parts, metal screws and plastic (3D printed) parts.

- Take metal parts (screws, standoffs, aluminium parts) to a metal collection point.
- Dispose of carbon and plastic parts in accordance with your local waste management rules.
- Sort the packaging by material (paper, plastic).
- If the frame is part of a finished drone, remove the electronics (motors, flight controller, camera, transmitters) and batteries before disposal and hand them in separately at a collection point for electrical equipment and batteries – they must not end up in mixed municipal waste.

6. Warranty and rights arising from defective performance

The rights and obligations of the contracting parties are governed by Czech law, in particular by Act No. 89/2012 Coll., the Civil Code, and Act No. 634/1992 Coll., on consumer protection.

- The seller is liable to the buyer for the product being free of defects on receipt. If the buyer is a consumer, a defect may be notified **within two years of receipt** of the product (Section 2165 of the Civil Code).
- If a defect appears within **one year** of receipt, the product is deemed to have been defective already at the time of receipt (Section 2161(5) of the Civil Code).
- When purchasing online, a consumer has the right to **withdraw from the contract within 14 days** of receiving the goods without giving a reason (Section 1829 of the Civil Code).
- Claims should be made with the retailer from whom you purchased the product. The importer's contact details are given in Chapter 5.1.
- The competent body for out-of-court settlement of consumer disputes is the **Czech Trade Inspection Authority**, Štěpánská 796/44, 110 00 Prague 1, www.coi.cz.